Airpura AIR PURIFIERS

UP TO 2000 SQFT.

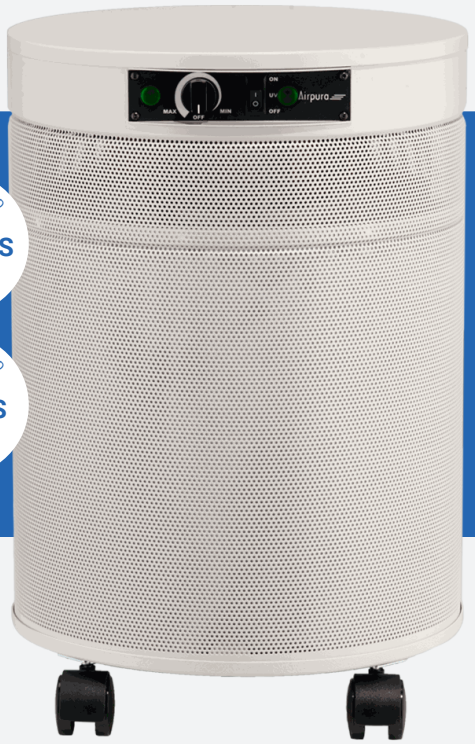

AIRPURA LIMITED 10 YEARS LABOR WARRANTY

AIRPURA LIMITED 5 YEARS PARTS WARRANTY

GERMS AND MOLD - WITH SUPER HEPA

UV614

Protect yourself from disease-causing airborne/aerosolized viruses, bacteria, mold and airborne chemicals.

REMOVES: BACTERIA, ANTIGENS, PATHOGENS, MOLD SPORES, AIRBORNE CHEMICALS

AVAILABLE COLORS

TECHNICAL SPECS

PREFILTER	Poly Prefilter	**WEIGHT**	49 lbs
CHEMICAL GAS & ODOR FILTER	2" Carbon Filter* 18-lbs, Activated Carbon Filter (100% Coconut Shell) ** ± 8 oz*	**DIMENSIONS**	23" High, 15" Wide
MAIN PARTICLE FILTER	Super HEPA 14 Filter (99.99% of airborne particles ≥ 0.3 microns)	**COLORS**	Black, White, Cream, Champagne Mist, Soft Silver
UV GERMICIDAL TECHNOLOGY	Range of 16-18 Watt UVC Germicidal Lamp	**HOUSING MATERIALS**	Powder coat steel
VOLTAGE	115 or 220 volts	**FAN SPEED**	Variable
FAN SPEED	560 CFM (Free Flow)	**CASTERS**	Yes
AIR EXCHANGE PER HOUR	2	**ETL CERTIFIED**	no 3067330 / UL 507 CSA C22.2#113
SOUND NOISE	35 db on low (at 6 feet) 62 db on high		

GERMS AND MOLD

UV614

Airpura AIR PURIFIERS

UNIQUE FILTRATION SYSTEM

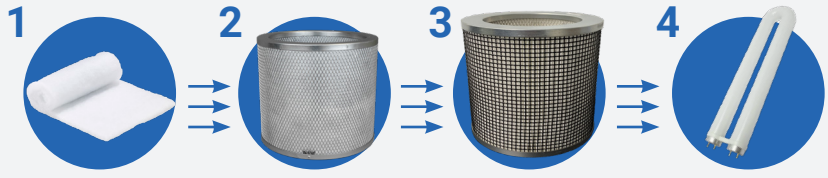

PREFILTER
REPLACE: 1 YEAR

CARBON FILTER
REPLACE: 2 YEARS

HEPA FILTER
REPLACE: 3-5 YEARS

UV LAMP
REPLACE: 18-24 months

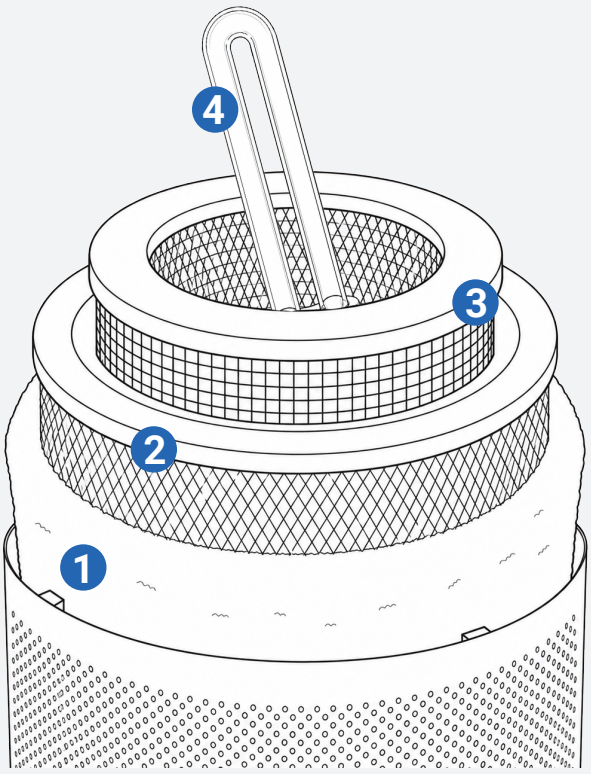

KEY FEATURES

- **PRESSURE SEAL** Airpura's unique pressure seal on the filter chamber along with close ended metal caps on the HEPA filter ensures that all of the dirty air passes through the filters. Other systems allow leakage and do not achieve the 99.99% HEPA filtration rating.
- **FELT GASKETS** seal the filter chamber. Maximize filtration with no rubber off-gassing found with other filters.
- **ALL METAL HOUSING** ensures no plastic vapors are emitted.
- **BACKWARD CURVED MOTORIZED IMPELLER** eliminates the vibrations and noise associated with older motor and shaft set ups.
- **VARIABLE SPEED MOTOR** lets you choose your ideal level of filtration.
- **MOTOR OUT OF THE AIR FLOW.** Most air purifiers blow the clean air over the motor and pick up new impurities before exhausting it.
- **UNIMPEDED AIRFLOW** simple and direct internal airflow avoids the air turbulence, inefficiency and noise associated with more convoluted systems
- **SEPARATE ELECTRICAL PARTS CHAMBER** prevents any off gassing from capacitors, condensers or switches.
- **PERFORATED STEEL EXTERIOR** offers both a softer appearance and 360 degree air intake and distribution.
- **SEPARATELY CHANGEABLE FILTERS** The Hepa and carbon filters can be changed separately so you only change them when appropriate and save operating costs.
- **THE UV-C GERMICIDAL LAMP** is an added level of protection against pathogens trapped on the HEPA, preventing them from being released back into the air.

PROUDLY CANADIAN

YOUR AIRPURA™ DEALER