Airpura AIR PURIFIERS

UP TO 2500 SQFT.

ODOR-FREE CARBON FOR CHEMICALLY SENSITIVE (MCS)

G700



AIRPURA LIMITED 10 YEARS LABOR WARRANTY

AIRPURA LIMITED 5 YEARS PARTS WARRANTY

The performance of this best-selling air purifier has been proven to eliminate a wide range of airborne chemicals and odors leaving only clean and fresh air.

REMOVES: HOUSEHOLD CHEMICALS, POLLEN, MOLD SPORES, DUST, ALLERGENS, ODORS.

AVAILABLE COLORS

TECHNICAL SPECS

PREFILTER	Poly Prefilter	**WEIGHT**	54 lbs
CHEMICAL GAS & ODOR FILTER	2” Carbon Filter 18-lbs*, Activated Odorless Carbon Filter ** ± 8 oz*	**DIMENSIONS**	23” High, 15” Wide
MAIN PARTICLE FILTER	True HEPA filter (40 sq. ft) 99.97% Efficient at 0.3 microns	**COLORS**	Black, White, Cream, Champagne Mist, Soft Silver
VOLTAGE	115 or 220 volts	**HOUSING MATERIALS**	Powder coat steel
FAN SPEED	635 CFM (Free Flow)	**FAN SPEED**	Variable
AIR EXCHANGE PER HOUR	2	**CASTERS**	Yes
SOUND NOISE	29 db on low (at 6 feet) 63 db on high	**ETL CERTIFIED**	no 3067330 / UL 507 CSA C22.2#113

ODOR-FREE CARBON FOR CHEMICALLY SENSITIVE (MCS)

G700

Airpura AIR PURIFIERS

UNIQUE FILTRATION SYSTEM

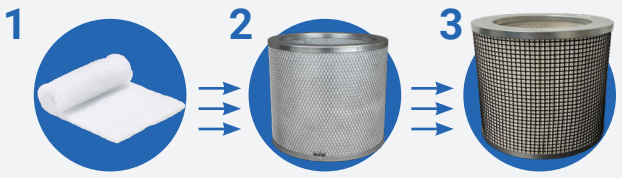

PREFILTER
REPLACE: 1 YEAR

CARBON FILTER
REPLACE: 2 YEARS

HEPA FILTER
REPLACE: 3-5 YEARS

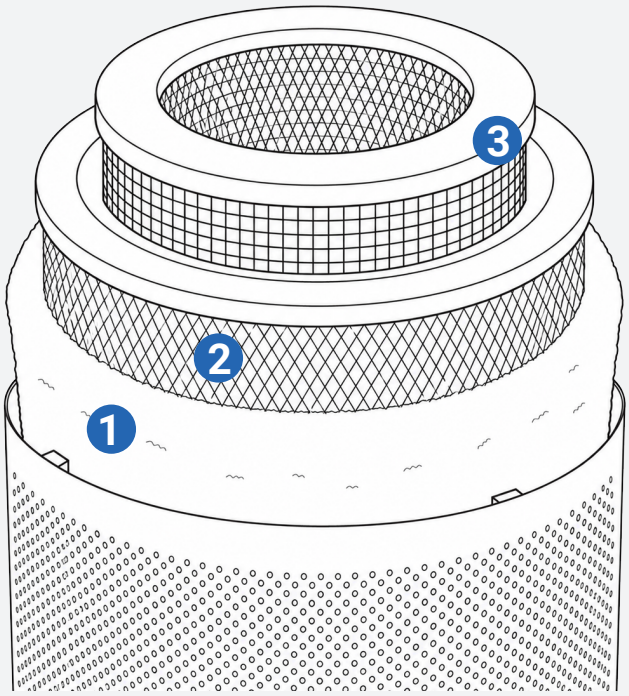

KEY FEATURES

- **PRESSURE SEAL** Airpura's unique pressure seal on the filter chamber along with close ended metal caps on the HEPA filter ensures that all of the dirty air passes through the filters. Other systems allow leakage and do not achieve the 99.97% HEPA filtration rating.
- **FELT GASKETS** seal the filter chamber. Maximize filtration with no rubber off-gassing found with other filters.
- **ALL METAL HOUSING** ensures no plastic vapors are emitted.
- **BACKWARD CURVED MOTORIZED IMPELLER** eliminates the vibrations and noise associated with older motor and shaft set ups.
- **VARIABLE SPEED MOTOR** lets you choose your ideal level of filtration.
- **MOTOR OUT OF THE AIR FLOW.** Most air purifiers blow the clean air over the motor and pick up new impurities before exhausting it.
- **UNIMPEDED AIRFLOW** simple and direct internal airflow avoids the air turbulence, inefficiency and noise associated with more convoluted systems
- **SEPARATE ELECTRICAL PARTS CHAMBER** prevents any off gassing from capacitors, condensers or switches.
- **PERFORATED STEEL EXTERIOR** offers both a softer appearance and 360 degree air intake and distribution.
- **SEPARATELY CHANGEABLE FILTERS** The Hepa and carbon filters can be changed separately so you only change them when appropriate and save operating costs.

PROUDLY CANADIAN

YOUR AIRPURA™ DEALER