Airpura AIR PURIFIERS

## FORMALDEHYDE, VOCS AND PARTICLES - WITH SUPER HEPA

UP TO 2500 SQFT.

# F714



AIRPURA LIMITED 10 YEARS LABOR WARRANTY

AIRPURA LIMITED 5 YEARS PARTS WARRANTY

**The performance of this best-selling air purifier has been proven to eliminate a wide range of airborne chemicals and odors leaving only clean and fresh air.**

**REMOVES:** FORMALDEHYDE REMOVAL OF 99% ALONG WITH VOCS RELEASED FROM COMMON HOUSEHOLD PRODUCTS, RENOVATION AND CONSTRUCTION MATERIALS, PRESSED WOOD PRODUCTS AND PESTICIDES. SPECIALLY BLENDED CARBON BLENDS AVAILABLE TO ADDRESS SPECIFIC CHEMICALS.

**AVAILABLE COLORS**

## TECHNICAL SPECS

| | | | |
|---|---|---|---|
| **PREFILTER** | Poly Prefilter | **WEIGHT** | 49 lbs |
| **CHEMICAL GAS & ODOR FILTER** | 2” Carbon Filter<br>18 lbs * Activated & Enhanced Carbon Filter (potassium permanganate, coconut shell)<br>** ± 8 oz* | **DIMENSIONS** | 23” High, 15” Wide |
| **MAIN PARTICLE FILTER** | Super HEPA 14 Filter (99.99% of airborne particles ≥ 0.3 microns) | **COLORS** | Black, White, Cream, Champagne Mist, Soft Silver |
| **VOLTAGE** | 115 or 220 volts | **HOUSING MATERIALS** | Powder coat steel |
| **FAN SPEED** | 635 CFM (Free Flow) | **FAN SPEED** | Variable |
| **AIR EXCHANGE PER HOUR** | 2 | **CASTERS** | Yes |
| **SOUND NOISE** | 29 db on low (at 6 feet)<br>63 db on high | **ETL CERTIFIED** | no 3067330 / UL 507<br>CSA C22.2#113 |

FORMALDEHYDE, VOCS
AND PARTICLES

**F714**

Airpura AIR PURIFIERS

# UNIQUE FILTRATION SYSTEM

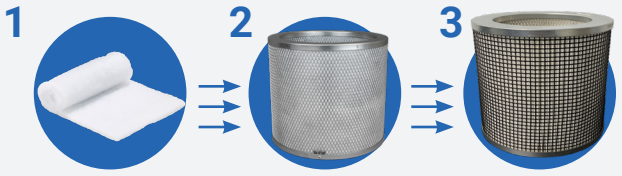


**PREFILTER**
REPLACE: 1 YEAR

**CARBON FILTER**
REPLACE: 2 YEARS

**HEPA FILTER**
REPLACE: 3-5 YEARS

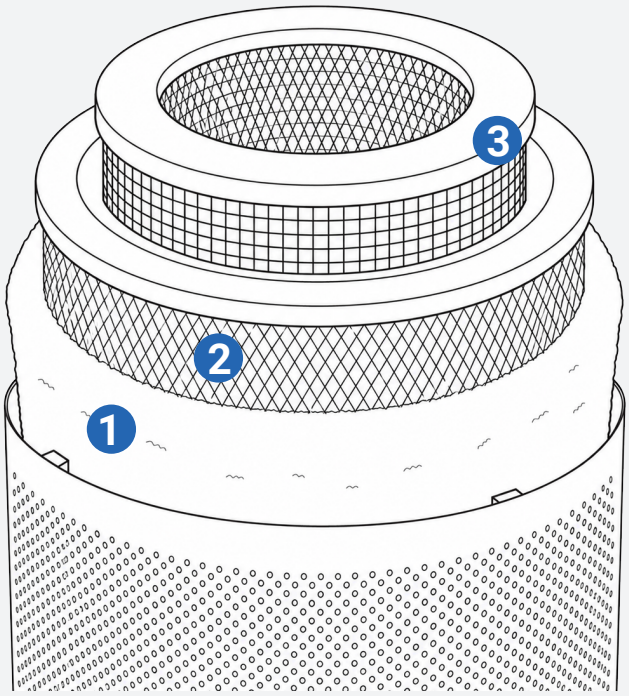


# KEY FEATURES

- **PRESSURE SEAL** Airpura's unique pressure seal on the filter chamber along with close ended metal caps on the HEPA filter ensures that all of the dirty air passes through the filters. Other systems allow leakage and do not achieve the 99.99% HEPA filtration rating.
- **FELT GASKETS** seal the filter chamber. Maximize filtration with no rubber off-gassing found with other filters.
- **ALL METAL HOUSING** ensures no plastic vapors are emitted.
- **BACKWARD CURVED MOTORIZED IMPELLER** eliminates the vibrations and noise associated with older motor and shaft set ups.
- **VARIABLE SPEED MOTOR** lets you choose your ideal level of filtration.
- **MOTOR OUT OF THE AIR FLOW.** Most air purifiers blow the clean air over the motor and pick up new impurities before exhausting it.
- **UNIMPEDED AIRFLOW** simple and direct internal airflow avoids the air turbulence, inefficiency and noise associated with more convoluted systems
- **SEPARATE ELECTRICAL PARTS CHAMBER** prevents any off gassing from capacitors, condensers or switches.
- **PERFORATED STEEL EXTERIOR** offers both a softer appearance and 360 degree air intake and distribution.
- **SEPARATELY CHANGEABLE FILTERS** The Hepa and carbon filters can be changed separately so you only change them when appropriate and save operating costs.

**PROUDLY CANADIAN**

YOUR AIRPURA™
DEALER